RA 300 E
Wiring plan
As at: 08/06/14 Time:08:39

Stromlaufplan RA 300 E

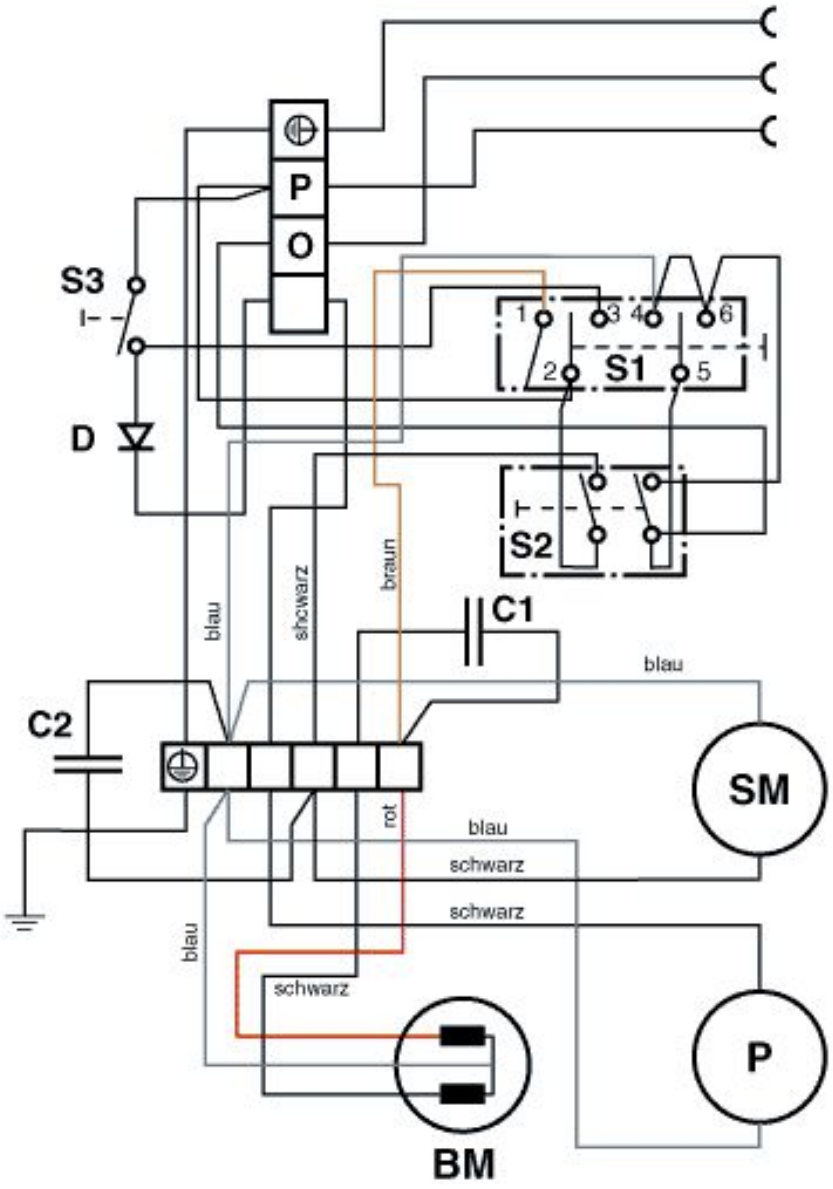

S1 = Wippenschalter B rstmotor-Pumpe
S2 = Wippenschalter Saugmotor
S3 = Tastschalter Pumpe
C1 = Betriebskondensator
C2 = Entst rkondensator
D = Diode
BM = B rstmotor
P = Pumpe
SM = Saugmotor

RA 300 E
Wiring plan

As at: 08/06/14 Time:08:39

Pos.	Description	Reference
BM	Brush motor	300.281
C1	Working capactior	P...385I
C2	Capacitor	P...387A.
D	Diode	
P	Pump NDS-L	P...815
S1	Tumbler switch brush motor - pump	P...240M
S2	Tumbler switch vacuum motor	P...240
S3	Switch for pump	950.453
SM	Vacuum motor 800 W	P...870C